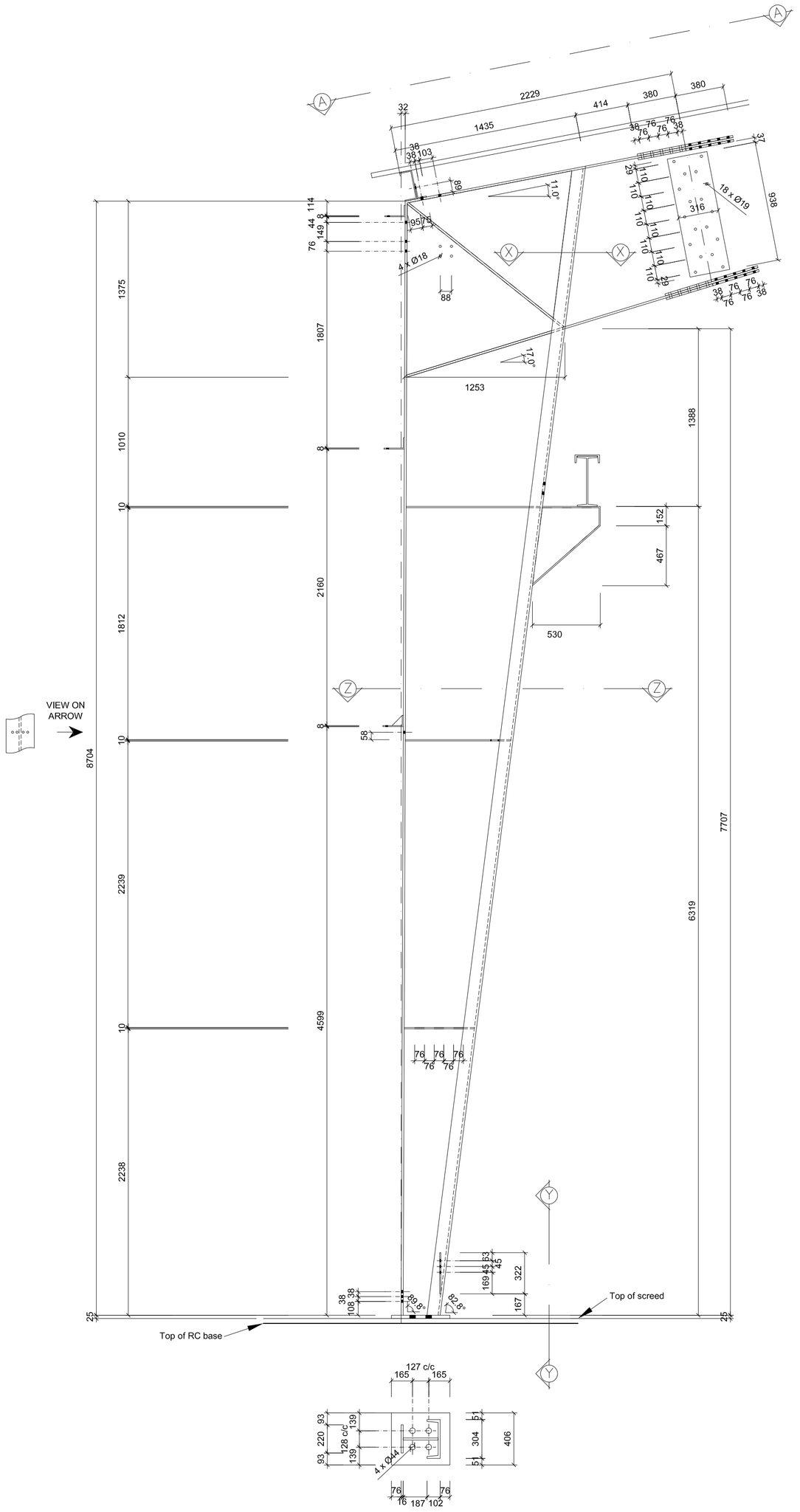

BASE DETAIL
SCALE 1:25

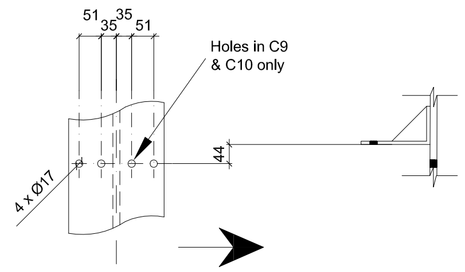

VIEW ON ARROW
SCALE 1:10

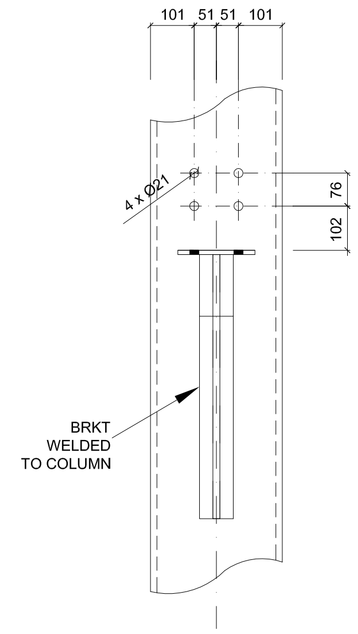

END VIEW ON CRANE GIRDER BRKT
SCALE 1:10

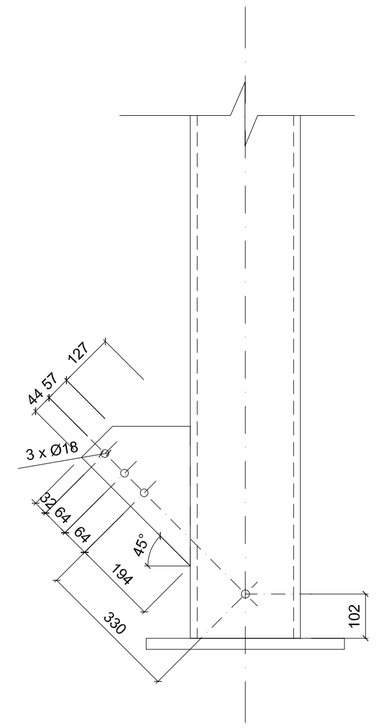

VIEW ON Y-Y
SCALE 1:10

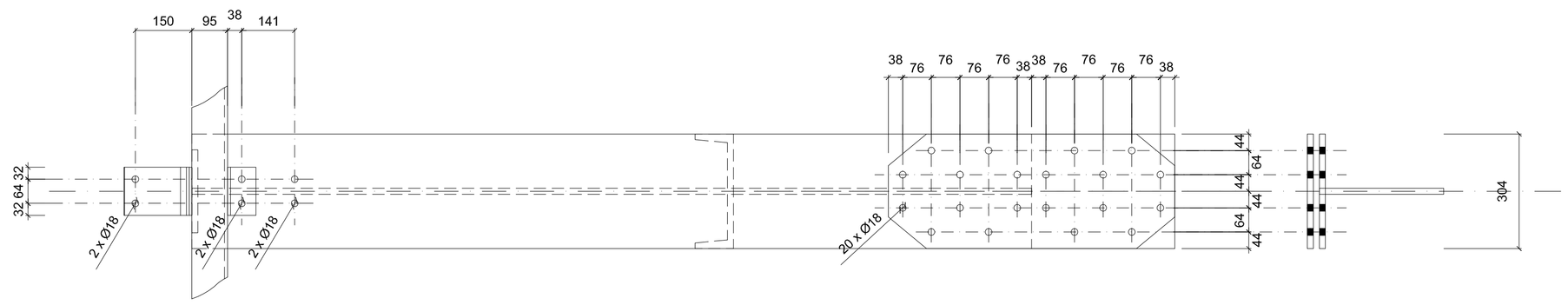

PLAN ON A-A
SCALE 1:10

END VIEW ON TOP FLG
SCALE 1:10

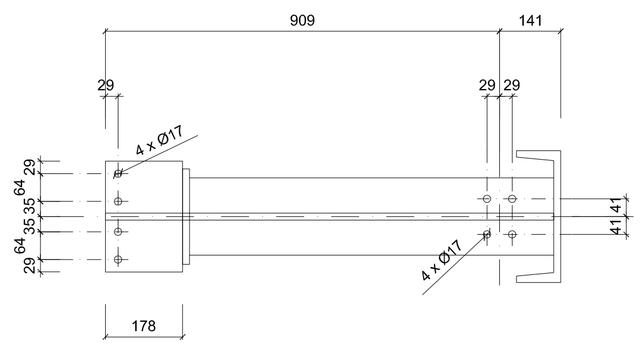

PLAN ON Z-Z
SCALE 1:10

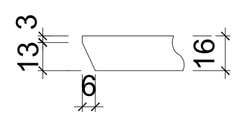

PREPARATION OF FLG STIFFENERS BEFORE WELDING
SCALE 1:2

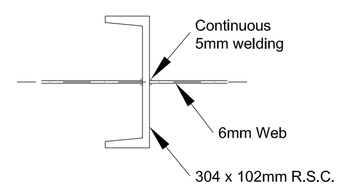

VIEW ON X-X
SCALE 1:10

No.	DATE	AMENDMENT

Client

CSIR
our future through science

Drawn By:

csm
Tel: +27(0) 861 276 266
www.csmeng.co.za

Discipline: Structural

Project: HYDROMECHANICS LABORATORY STELLENBOSCH

Signed by
Client:
Engineer:

Drawing title: STEEL COLUMN (AS-BUILTS)

Date	Nov. 2011	Designed	–
Stage	AS-BUILTS	Drawn	AvR
Scale	1:25 1:10 1:2	Checked	–
Size	A1	Revision	–

Dwg No: 01117SES/AS/03

Issue: FOR INFORMATION