Chapter 5.6

Land subdivision

5.6

TABLE OF CONTENTS

LIST OF FIGURES

INTRODUCTION

One of the most basic design decisions facing settlement planners, is how the land will be divided and used to provide for new development. Factors that influence this decision include the physical conditions of the site, market forces, surrounding patterns of development, and regulatory limitations. The size of the site also often influences development options; large parcels of several hectares can offer many opportunities for creative and diverse land plans, while small sites usually offer a more limited number of possibilities.

More formally, a subdivision could be defined as the division of any improved or unimproved land for the purposes of sale, lease, or financing. For this reason legal processes have been established to ensure the following:

- proper registration and title for individual parcels of land;
- accurate identification of land by way of survey;
- establishment of rights to tenure and occupation;
- security for financing/cost recovery;
- identification of boundaries for development;
- a formal procedure of conducting subdivision; and
- allowance for taxation.

The abovementioned are achieved through application of various forms of legislation such as the Provincial Ordinances, Deeds Registry Act, Land Survey Act, and more recently the Development Facilitation Act.

In simplified terms, the role of subdivision in this context is as follows:

- to identify public versus private land;

- to create portions of land (erven) which suit the purposes for which they are intended (i.e. industrial versus residential versus open space versus undeveloped land etc);

- to establish a vehicle for implementation of policy or overall planning philosophy; and

- to identify land which is unusable for settlement purposes either as a result of physical or topographic limitations.

QUALITATIVE GUIDELINES FOR LAND SUBDIVISION

Allow for density and diversity

- Encourage higher densities at strategic points (like public transport stops and adjacent to higher amenity areas such as parks), and along significant public transport routes. The higher densities would provide the economies of scale to support the facilities and/or transport service. This could be achieved by providing for smaller lots, and lots capable of supporting higher density development at these positions and along these routes in the settlement.

- Larger land uses like sport stadiums, large “green” spaces, industrial and large commercial sites should occur at the edges of districts where they do not disrupt the fine-grain mix of uses. There, they can be “shared” by a number of districts.

- A diversity of stand sizes should be provided to accommodate a range of activities but the following points should be kept in mind:

  - the need for business and home-based enterprises to locate in close proximity to concentrations of economic activities (taking advantage of agglomeration economics) and along arterial routes (to ensure optimal access and exposure);

  - the ability of land-uses and building forms to act as noise buffers to external noise sources such as major roads, railways or industries;

  - the capacity of potential mixed-use lots, initially developed for housing, to efficiently convert to or add a business use; and

  - opportunities to allocate highly accessible strategic sites on transport routes to larger scale industrial or distribution uses.

It is therefore necessary to try to attain the highest residential densities and greater mix of land use along major connection streets and in close proximity to commercial concentrations.

Consider the range of housing types required

South Africa's human settlements portray a range of delivery systems and a variety of ways in which communities participate in the housing process. The culmination of these lead to a wide variety of housing types. Housing types differ in terms of materials, permanence, design, internal and external finishes, size and density, layout on the site and in relation to each other, number of stories and functions. There are also certain house types geared specifically towards the rental market and others which are for private ownership. The determination of house type is dependent on:

- residents or households, understood within their societal context and described in terms of such qualities as age, gender, opinions, beliefs and skills of members;
- the dwelling and how it is used by household members;
- existential context or setting of the household which includes relations with various social groupings, including family groups, neighbourhood groupings, labour associations; wider political and economic conditions of the society; and a household's material conditions, including qualities of site and climate and the households access to resources; and
- the individual dwelling within the broader settlement, with qualities of form, substance, function, meaning and locality.
- It is therefore necessary to provide a range of residential lot sizes to suit the variety of dwelling and household types within the area, and dimensions that meet user requirements. A variety of both lot sizes and housing types throughout settlements facilitate housing diversity and choice and meet the projected requirements of people with different housing needs. Figure 5.6.1 is a representation of a layout that achieves a diversity of lot sizes and shapes.

Figure 5.6.1: Diversity created by different lot sizes and shapes

Consider the site context

It is important to keep in mind that land subdivision does not occur in a vacuum but is largely influenced by the surrounding natural features as well as the existing adjacent settlement structure. The success of a site's subdivision in achieving a distinct identity and "sense of place" can be measured in terms of how well the design relates to the specific site and its wider urban context. The context and site analysis are therefore crucial means through which the design will achieve these outcomes, and will also identify any features that will add value to a development by accentuating its "uniqueness" or "character".

The purpose of context analysis is to ensure that new subdivision and development is connected to, and integrated with, surrounding natural and developed areas, including planned and committed development for adjacent sites. The site analysis will ensure that site features (natural and cultural assets) and constraints (including noise, soil erosion, poor drainage, saline soils and fire risk) inform the layout decisions to enhance local identity.

Natural features

The land form and its features on which a settlement is developed, are the foremost determinants of that settlement's form. In considering the landscape, we are seeking its character. The prominent features of the landscape (ranges of hills on the horizon, plateaus) can be employed actively as sites or passively as vistas. They can be used as major vista objectives from points within the city or as special sites for buildings. Some are better left in their natural state.

Topography

Land subdivision should aim to accentuate diversity in land form, and the topography of the site is the most important structural element to start with. Topography is a major determinant of a site plan because topography influences the type and cost of development, controls the direction and rate of water runoff, adds variety to the landscape, influences the weather and climate, and affects the type of vegetation and wildlife. High costs relating to grading and site improvements are associated with hillside sites. From an environmental perspective, as the slope increases, erf sizes should also increase to prevent excessive run-off. Where the cost of improving lots needs to be kept to a minimum, gently rolling, well-drained land is most desirable. Very flat sites present problems of sewer and storm drainage that can raise costs of improvement. Flat sites must be sculptured into contours and elevations that create variety in the siting of the houses as well as a functioning infrastructure system (ULI 1990).

Soil conditions

If the soil conditions are good for cultivation there is a reason for large private plots, allotments or other areas the residents can use for food production. Heaving clays or collapsible sands often require costly foundation solutions. In order to cover these costs and make the development in lower income areas more viable, erf sizes need to be decreased to provide more cost effective solutions.

Streams and flood plains

Stream patterns need to be taken into account in the subdivision of a site in order to ensure that the subdivided land drains effectively. No subdivision may take place within the 50-year flood plain of streams and rivers, which often results in this land being set aside for open space.

Plant cover

It is important to retain as much of the existing plant cover as possible during the subdivision process. Established foliage (mature trees) gives an "established" feel to a new development and could be preserved in most cases in a land subdivision, with minimal cost implications.

Frontage

Whenever possible within the subdivision layout, residential erven should be orientated to maximise the northern aspect. In the case of block subdivision of smaller erven, it is preferable to orientate the blocks to run east-west rather than north-south as fairly narrow dwelling units within a north-south block configuration tend to over-shadow one another. However, in some instances (e.g. KwaZulu-Natal) it is not always possible or necessary to have erven subdivided in order to maximise the northern aspect.

Wind

Changes in wind direction during the various seasons can be utilised within subdivision layout to assist, to a limited degree, with creating a more desirable micro-climate within the settlement. It is often to the overall settlement advantage if block subdivision can be orientated to allow cool summer breezes to move through the settlement while winter winds are diverted. The influence of winds on the settlement pattern can be seen to be particularly important in the coastal regions which tend to be more susceptible to wind patterns. Micro-climates should also be taken into account with particular reference to land sea breezes and anabatic and katabatic winds which could influence the micro-climate.

Noise

A site constraint that has a profound impact on the quality of place of a settlement and which can be rectified by layout and land-use planning is noise pollution. Effective noise buffering can be achieved where settlements - abutting external noise-sources such as arterial routes, railways or industries - provide lots capable of accommodating:

- non-residential uses which provide a shield to residential uses behind;
- home-business uses with the workplace providing the buffer; and/or
- dwelling layouts which locate the more noise-sensitive rooms away and protected from the noise source (see also *Ecologically sound urban development*, Sub-chapter 5.8.2).

Cultural features

No population group or community is completely homogeneous, but different people have varying needs, preferences, aspirations, tastes and expectations. The relevant characteristics, needs and constraints of the community or anticipated target market are crucial informants that should guide land subdivision - especially with regard to levels of affordability (income profile) and community and individual preferences (e.g. it should be determined whether provision must be made for agricultural activities, whether there will be need for large communal stands, etc). A further

example could be if the community tends to live within an extended family structure, larger erven would need to be created to allow for the incremental development of the dwelling unit. Whether the community is highly mobile or not is an additional feature which would result in alternative subdivision layout patterns.

An aspect that needs consideration in this regard is that of social networks. These networks should be reflected in the planning layout in order to increase the complexity and enrich the physical plan. The subdivision of an area into blocks, streets, courtyards and houses, should be coordinated with the size and organisation of communities, street committees and other groups with common interests. A strong connection between such groups and the plan could encourage residents' own initiatives and influence them to take more responsibility for their living environment (Hifab 1998).

Accommodate change

For settlements to be flexible over time, the layout must be able to accommodate mixed and changing land uses. It is therefore important to ensure that a reasonable variety of house types is attainable, in order to ensure adaptability over time. It is also necessary to plan for future/expected developments that will impact on the settlement like a major urban centre or railway station. In these cases, lot dimensions and development should be designed to facilitate future intensification.

When undertaking land subdivision one needs to provide a certain number of larger erven to accommodate various public facilities. In the past these facilities were usually located in a centralised position within the residential precincts. These facilities, due to their location, are unable to cater for changing community needs as they serve a limited range of users. If those users' needs change, the facility could become obsolete. If, however, the erven that are to accommodate community facilities are located along routes of high accessibility, the facilities' catchment area increases and is also more diverse, and the chances of its sustainability over time therefore increases.

Enhance the effective use of resources

To enhance the land and energy resource efficiency of a layout the following design factors should be considered:

- maximise the number of solar-oriented lots;
- maximise the number of lots;
- minimise the slope of roadways and lots; and
- minimise total costs for on-site infrastructure.

QUANTITATIVE GUIDELINES

Block size

The geometry of the block and the size and relationship between blocks is a basic determinant of urban form. While it does have inherent flexibility of arrangement and use, it is also the source of great difficulty where urban accent is needed. A block can be too long or too short - too long to provide rhythmic relief and lateral access, and too short to allow substantial development. The size of blocks will be influenced by the expected nature and mix of land-use activity on the site and the attempt to optimise efficiencies in terms of pedestrian and vehicular movement.

The subdivision of settlements into a specific block type has an impact on the movement and circulation systems within the settlement. The large scale production of motor vehicles has also resulted in the development of superblocks which allowed for a reduction in the number of intersections to facilitate optimum traffic movement along the length of the blocks, while at the same time reducing traffic flows through the residential precincts. The standard application of the superblock layout to the majority of residential settlement layouts has proven problematic in areas of low car ownership, as the superblock has been found to constrain pedestrian movement.

In areas of low car ownership, fairly short blocks of approximately 100 m in length are most appropriate. As the block length decreases, the number of through connection increase for pedestrian movement. On the other hand, shorter block lengths imply that more street area needs to be constructed, which in turn increases the costs and also results in fewer erven being provided with a resultant loss in gross density.

Block widths have not been found to exhibit the same problems as block lengths, as the maximum widths of blocks usually does not exceed 60 m in length. A consideration in establishing appropriate block widths is safe road intersection spacings. It has, however, been identified that intervals of between 30 to 40 m are necessary, in order to provide for adequate driver visibility and safe clearance (Behrens and Watson 1996).

The scaling down of large blocks could be beneficial in creating a sense of belonging, especially for children. In a low-income development like Joe Slovo Village in Port Elizabeth (Hifab 1998), micro-community units of 10 to 20 people make their own plot cluster layouts. The bigger the group, the larger the combined resources which can be used for the common activities. Smaller groups might work more easily together. In Joe Slovo Village, 12 families are found to be a suitable number to form a micro-community around a common space. The group decides on the layout and how to

use the central space, e.g. as a park, a playground, or for gardening, etc.

Land utilisation

In order to assess the efficiency of land utilisation within the proposed block subdivision, Behrens and Watson (1996) have identified the following methods to access layout efficiency:

- Network length: area ratio
  This ratio measures the length of road network in relation to the area served. In general, the lower the value of the ratio the more efficient the network. A suggested target value is 150 - 230 m/ha.

- Network length: dwelling unit ratio
  This ratio measures the length of road network relative to the number of dwellings within a given area. In general, the lower the value of the ratio the more efficient the network. The area and dwelling unit ratios need to be considered in conjunction, because narrower erven in a two erf-deep block, implies a longer road network for the same erf area. A suggested target value is 5 - 10 m/du.

- Frontage: depth ratio
  This ratio measures the width of an erf relative to length. In general, the greater the ratio (i.e. the shorter the erf frontage) the more efficient the layout. Narrowing erf frontages and reducing plot sizes effectively reduces the network length per erf and increases erf densities. A suggested target value is between 1:5 and 1:3.

- Residential density
  Density measures have two interrelated components. The first is the density of residential dwellings. Gross residential density expresses the number of dwelling units divided by total site area, and net residential density expresses the number of dwelling units divided by that part of the site taken up by residential use only. The second is the density of population, expressed as the number of people divided by the site area. Appropriate densities are specific to a range of social, economic and environmental factors - with a gross density of over 50 du/ha likely to be appropriate in most developing urban areas of South Africa.

- Land utilisation index
  The index, or land use budget, identifies the proportional use of land. Land uses are conventionally broken down into residential, commercial, industrial, public facilities, public amenities and movement. Appropriate proportions of land uses, particularly commercial, industrial and public amenity uses, are context specific. However, as a rule of thumb, at the local area layout scale, residential, commercial and industrial uses should take up approximately 55% of land, public facilities and amenities approximately 25%, and movement less than 20%.

These tools of evaluation may be used to assess the benefit of the use of various block designs in a proposed subdivision layout. It should, however, be cautioned that these indicators should only be used as a guide. The context of the site which is to be subdivided, as well as both the physical and cultural context of the site, may result in one form of subdivision being preferable to another. This is despite the land efficiency index indicating that an alternative subdivision is preferable from a technical efficiency perspective.

Erven size and arrangements

The housing type or land use which is to occupy the erf generally determines the dimensions and the extent of the required erf. Single detached and semi-detached dwellings usually should have a minimum erf width of 8 m while the minimum width of erven for row housing is identified by Behrens and Watson (1996) as being not less than 5 m to ensure that acceptable sized rooms can be created. Multi-unit developments such as cluster housing and blocks of flats, offices or shops, have much wider and larger erven and can even occupy an entire block.

According to Chakrabarty (1987) an erf dimension with a frontage: depth ratio of 1:2 is generally acceptable. Behrens and Watson (1996) identify that ratios of between 1:5 and 1:3 are also acceptable. It is however important that the erf is of suitable dimensions for the structure being accommodated on it.

In order to achieve higher densities the size of subdivided land can be reduced. According to Dewar and Uytenbogaardt (1995) erf sizes of 60-100 m^2 are entirely adequate for habitable purposes. By encouraging vertical expansion into 2, 3 and 4-storey walk-up forms, the density of an area can be increased. The increase in density should go hand-in-hand with the provision of effective public and recreational spaces and streets to counter the lack of space on the smaller stands. When planning for erf sizes of these proportions, specific attention needs to be given to detail such as privacy, ventilation, roof slopes etc. For example, when making use of shared walls between dwelling units (party walls) due to the cost and space advantages, sound privacy could be a problem and proper care must be taken to minimise this.

As smaller stands reduce the potential for on-site agricultural activities, providing extra rooms for sub-letting, running a small business from home etc., larger stands that provide the opportunity to use the available area for these types of income-generating activities also need to be provided. This should,

however, not be seen as a reason why all stands should be big enough to accommodate this kind of activity since not all of them will be used for that purpose.

The impact of residential density on the cost of service provision is different for each service. The total cost of water and sewerage provision, for example, increases as density increases, with larger and more expensive piping requirements. On the other hand, because costs are shared by more users, the net cost is lower. The cost of other services such as street lighting remains fairly constant irrespective of density (Behrens and Watson 1996). It is also found that certain services only become viable at a certain density, such as public transport, for example, which requires densities in the region of 50 to 100 dwelling units per hectare to be viable.

As density increases, so servicing costs of a particular land subdivision would increase. Increased densities result in an increase in the number of service connections which have to be installed and possibly a higher standard of services to cope with the increased demand. Bulk service contribution payments which are usually made to the local authority for the construction of the bulk services network to deliver services to the proposed subdivided site, are based on the proposed density of the development on the site and consequently the increased demand. The exact formulae which local authorities use to determine bulk services vary between local authorities and also vary according to the service which is being provided.

Generic block subdivision options

Grid layout

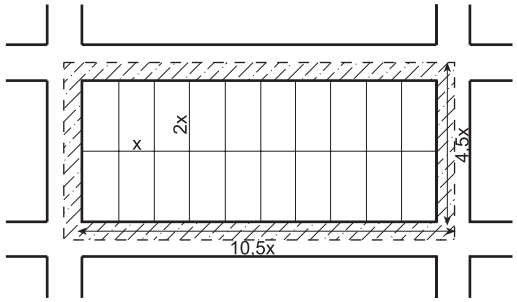

Figure 5.6.2: Conceptual diagram depicting the grid layout

Positive aspects

- The grid layout is possibly seen as the most permeable form of settlement layout, as traffic and pedestrians are able to penetrate and circulate indiscriminately within the settlement area.
- The grid subdivision pattern does not necessarily have to fit a rigid rectilinear pattern, but could also follow a more curvilinear arrangement.
- By virtue of its accessibility, the grid subdivision pattern tends to allow for the stimulation of greater economic opportunities, especially at the intersections of the grid.
- Grids may be aggregated or disaggregated into coarser or finer levels of resolution.

Negative aspects

The high degree of accessibility within the grid layout tends to have negative cost implications in relation to other block subdivision patterns. It is difficult to achieve the same network length: area ratios, network length: dwelling unit ratios, and residential densities of alternative subdivision patterns.

Aspects to ensure optimal design

- Short block lengths tend to increase the servicing costs, at the same time they also result in a high number of cross streets increasing traffic hazards and travel time through the area.

- The longer the block becomes the smaller the network length per dwelling unit becomes, the smaller the average road length, and the lower the costs of road development and service reticulation. The length of the block is, however, a trade-off with pedestrian movement within the settlement. Blocks cannot be excessive in length as pedestrian movement through the overall grid system decreases as blocks increase in length.

- Crosswalks through long blocks may be provided especially where a nearby shopping centre, school or park is located in order to prevent a larger number of residents of a neighbourhood being forced into circuitous routes in order to reach their destinations. It is, however, important that if crosswalks are utilised, they are clearly identifiable and well maintained.

- By reducing the width of the erven while keeping the erf size constant, it is also found that a more economic grid block subdivision can be created. It should, however, also be cautioned that the width of the erven cannot be narrowed without taking into account the functionality of the erf and the proposed housing type to be located on the erf.

- In order to further increase the width of the block in relation to its length, the introduction of pan-handle stands to produce a 4-stand deep block can be seen as an alternative.

Loop subdivision layout

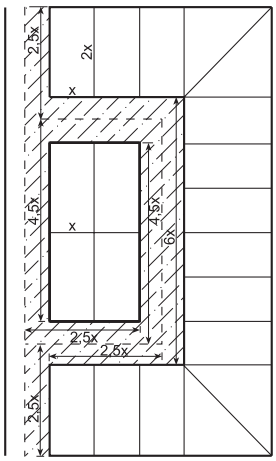

Figure 5.6.3: Conceptual diagram depicting the loop subdivision layout

Positive aspects

- Loop layouts can be seen as a common form of access street.

- The loop type layout provides greater efficiency in terms of network length : area ratios, network length : dwelling unit ratios, and residential densities, than the grid subdivision pattern.

- In high-mobility areas the loop subdivision pattern reduces vehicular movement through the residential environment.

Negative aspects

- The loop subdivision pattern is usually associated with the creation of superblocks, which tend to constrain pedestrian movement.

- Loops have been found to increase the number of intersections on distributor roads.

Aspects to ensure optimal design

- As in the case with the grid subdivision layout, the loop subdivision layout can also be made more economical by narrowing the width of erven and increasing the block length within the loop.

- In order to lessen the number of intersections which loops may make with the surrounding distributor road, the shape of the loop may be altered to the “P-loop” design which effectively reduces the number of intersections by half.

Cul-de-sac subdivision layout

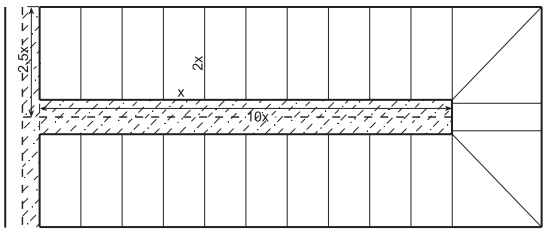

Figure 5.6.4: Conceptual diagram depicting the cul-de-sac subdivision layout

Positive aspects

- The length of the cul-de-sac can be seen to have little impact on cost efficiency, as the entire length of the road is fully utilised.

- The cul-de-sac type layout also assists in the separation of traffic and pedestrian movement in close proximity to the houses.

- In certain cases the cul-de-sac can also be utilised as an activity or play area, reducing the amount of additional open space required in the overall layout, which in turn would impact on the overall land budget.

- Servicing costs can be reduced as the erven surrounding the cul-de-sac are serviced by way of an extension of the main service line.

Negative aspects

- Where culs-de-sac are relatively short, local authorities tend be hesitant in taking over the maintenance of such small areas of road.

- Refuse removal is also a concern of the local authority, as waste removal trucks are too large to enter the cul-de-sac if no turning circles are provided. In these cases the residents may be required to place their waste on the access road at the entrance to the cul-de-sac.

- It is also important that stormwater be carefully considered within this type of design in order to ensure that it can drain out of the cul-de-sac.

- Problems have also been identified in terms of circulation within culs-de-sac in that access to the interior erven can be impeded by a blockage at the open end, and that traffic at the open end can become undesirably high if the streets are too long and access to a large number of homes are provided.

- Culs-de-sac can be highly negative when utilised in the design for subdivisions in communities which rely heavily on pedestrian circulation, in that they tend to constrain the free movement pedestrians through the settlement.

Aspects to ensure optimal design

- The only significant efficiency aspect which can be identified is, as in the previous examples, to reduce the width of the stand while maintaining the size of the erf.

- The restrictions which culs-de-sac exhibit to the movement of pedestrians through the settlement can be alleviated to some degree if pedestrian crosswalks are provided between the heads of two adjacent culs-de-sac.

Woonerf subdivision layout

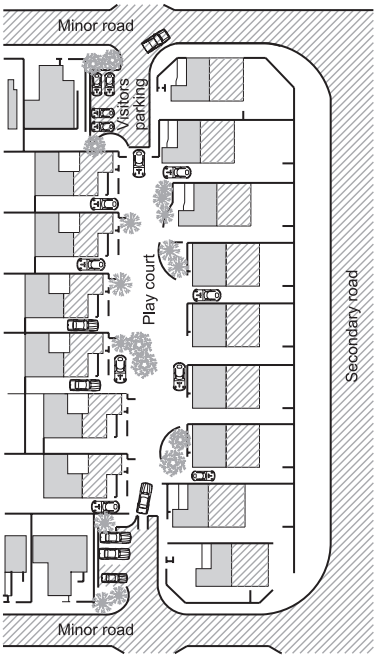

Figure 5.6.5: Conceptual diagram depicting the woonerf subdivision layout

Positive aspects

- This type of sub-division is characterised by fairly small stands usually of approximately 150 m^2 in extent. Therefore fairly high net densities of up to 62 dwelling units per ha can be achieved according to Kitchin (1989).

- Houses are usually attached or semi-detached, facing onto a paved court. Although vehicles are allowed to move along the street, their progress is restricted by the street design which is orientated more towards pedestrian movement and other activities.

- The accommodation of play areas within the road reserve should impact positively on the land-use budget, as less land will need to be set aside for open space.

Negative aspects

- As with the cul-de-sac design it has been found that stormwater runoff needs to be carefully considered, as large built and paved areas result in increased runoff.

- The different boundary setbacks of the housing units as well as the paving and landscape design of the play court areas can result in an increase in the total layout cost.

Cluster

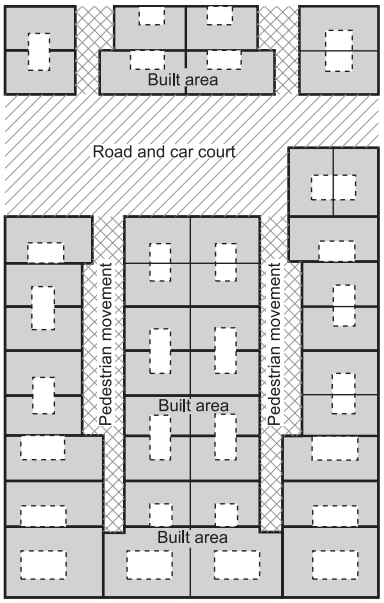

Figure 5.6.6: Conceptual diagram depicting the cluster subdivision layout

Positive aspects

- Where physical characteristics of the site to be subdivided, such as slope or dolomitic constraints, prevent the creation of the standard subdivision layout, alternative pedestrian-based layouts may have to be considered.
- In order to ensure that stable foundations are created in these cases at affordable cost levels, dwelling units have to be accommodated in a row-housing type of configuration.
- It has been identified by GAPP Architects (1997) that densities of over 55 dwelling unit per gross hectare can be achieved using this type of subdivision design.
- Access to the individual units is by way of pedestrian walkways, with a centralised parking court provided for residents who may own a car. It is seen as sufficient access for communities who rely predominantly on pedestrian mobility.

Negative aspects

- The consequence of the site constraints (for example dolomitic risk zone requires suitable structural base and standard of services) would be that the individual erven would be on average between 60m^2 to 90m^2 in extent.
- Due to the density and coverage of the site, mainly hard spaces are created which would have to be designed carefully.

Services

The subdivision and block layout have very tangible implications on the cost and maintenance of services (Figure 5.6.7). Not only the size of stands, but also the shape thereof has an influence on the layout and cost of services. The overall cost for infrastructure provided

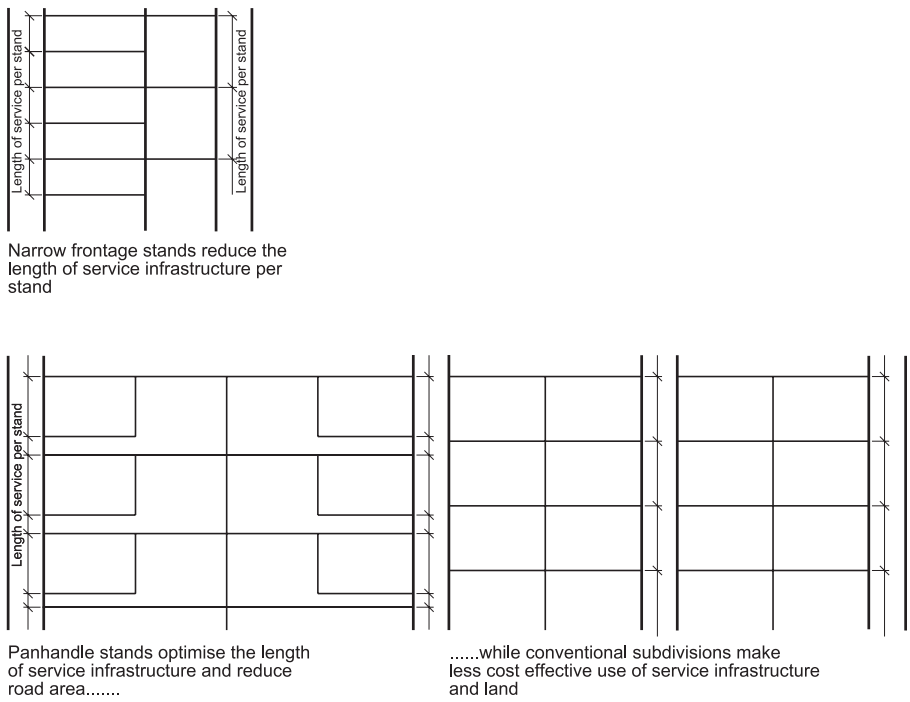

Figure 5.6.7: Optimising service infrastructure through erf layout

along any given street stays more or less the same regardless of the number of stands serviced along the street. Therefore, the narrower the street frontage of the stands, the more dwelling units share in the cost of the services and the lower the infrastructure cost per dwelling unit. It is therefore usually better to provide narrow, deep stands.

It is generally accepted that manholes are required at approximately 100 m interval for the maintenance and repair of services such as sewerage as well as optimising the cost for the installation of such services. It is also necessary that block lengths are kept as straight as possible as any changes in direction of the services requires an additional manhole to be added (see sub-chapter 5.1).

Service reticulation can also be seen to influence the more detailed subdivision of the block into individual erven. Services can either be reticulated in the middle of the block or running within the road reserve. The mid-block reticulation of sewerage, water supply, electrification and telecommunication cables is often favoured in lower income areas for cost reasons. By not having to contend with traffic loads and other services in the road reserve, services located at mid-block can be laid at shallower depths.

Apart from these advantages there are some hitches associated with mid-block reticulation, resulting from its location. Gaining access to the services in the mid-block is often found to be problematic with owners refusing access to council workers purely due to owners being at work during the day. Illegal second dwelling units which are constructed to the rear of stands are often over the mid-block services, which results not only in additional inaccessibility but the weight of the structure on the services may also result in damage.

When erven are smaller than 10 m in length, it becomes inefficient to design conventional two-erf deep blocks, as the block widths of 20 m have proved to be dangerous from a vehicular perspective. Numerous subdivision patterns, like pan-handle erven or blocks with pedestrian-only routes, can increase the number of erven between road reserves. The latter assumes that erven within the centre of the block will never require private vehicular access. Four-erf deep subdivision patterns offer servicing advantages, as more erven can be serviced from a single service running in the road reserve. It should be noted however, that households often prefer erven with street frontages because of the trading opportunities they offer, better security by being in the public view and the awkward toilet locations that can result on inner erven.

BIBLIOGRAPHY

Atkins, G (1981). *Principle of planning and clarification design for low income housing developments in Zimbabwe*. Ministry of Local Government and Housing - Housing Development Services.

Behrens, R and Watson, V (1996). *Making urban places - Principles and guidelines for layout planning*. UCT Press.

Chakrabarty, B K (1987). Conventional Planning Practice and Optimisation in Residential Layout. *Third World Planning Review*. Vol 9, No 2, pp 117-133.

Chakrabarty, B K (1991). Optimization in residential land subdivision. *Journal of Urban Planning and Development*. Vol 117, No1, pp 1-14.

DeChiara, J and Koppelman, L (1975). *Urban Planning and Design Criteria*. Van Nostrand Reinhold Company.

Dewar, D and Uytenbogaardt, R S (1995). *Creating vibrant urban places to live: A primer.* Headstart Developments, Cape Town.

GAPP Architects and Urban Designers (1997). *Winnie Mandela upgrading project: A pre-feasibility report on a strategy for developing 4000 higher density units with special emphasis on walk-up apartments*, prepared on behalf of Khayalami Metropolitan Council.

Hifab International AB (1998). *Assessment of the South African Housing Programme* - Draft Report. Swedesurvey Inregia.

Kitchin, A K (1989). *Alternative Township Layouts (and Housing Configurations)* - A report on an analysis of certain FHA Projects and other information with a view to ascertaining specific areas for further attention.

Lynch, K and Hack, G (1984). *Site Planning*. MIT Press.

Spreiregen, P D (1981). *Urban design: The architecture of town and cities*. Krieger publishing company, Florida.

Turner, A (Ed) (1980). *Cities of the Poor*. Croom Helm, London.

Urban Land Institute (ULI) (1990). *Residential development handbook.* ULI, Washington.

Van der Schyff, Baylis, Gericke and Druce (1998). *Subdivision*. Unpublished report prepared for the CSIR. Pretoria.

Western Australia Planning Commission (1997). *Liveable neighbourhoods: Community design code*, Government of Western Australia, WAPC, Perth.